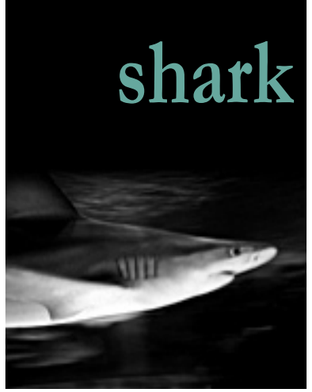

Grey reef shark

Tagging Sharks in Palau

Using state-of-the-art "internal tags" with a battery life of more than ten years, scientists in Palau are breaking new ground in studying the long-term behavior of individual sharks. Peter Verhoog and Georgina Wiersma went along to document exactly how sharks are caught, tagged, and released. And also discovered, how important divers can be in shark conservation.

Text and topside photography courtesy of Save Our Seas Foundation and Georgina Wiersma

Underwater photography courtesy of Save Our Seas Foundation and Peter Verhoog

The Micronesian Shark Foundation has now been tagging grey reef sharks for over two years. The Save Our Seas Foundation supported shark tagging program includes tagging of sharks with acoustic and satellite tags, deploying acoustic loggers around Palau's reefs and collecting measurements and DNA samples from tagged sharks. Further information is obtained through DNA samples from confiscated shark fins. These samples are analyzed in the Save Our Seas Shark Centre in Florida.

Speedy procedure

But how are sharks tagged? Save Our Seas Foundation CEOs Peter Verhoog and Georgina Wiersma had the privilege to board a 'tagging boat', together with Dr Mark Meekan and his research assistants. To be able to tag them, sharks have to be caught with a line and blunt hook and taken aboard the boat. All sharks in Palau have 'internal tags'. This means, that the tags are inserted in the shark's body through a small cut after injection of an anaesthetic fluid. When the tag is inserted, the wound is closed again and the shark is released. The whole process lasts around eight to nine minutes. Following the process is really exciting; the moment that the shark is caught, Peter jumps into the water to take pictures, while I stay on the boat. Dive master, Angelo, is our

Whitetip reef sharks (below) are also tagged

The caught shark is carefully pulled onto the stretcher (bottom left)

Keeping the oxygen flowing (right)

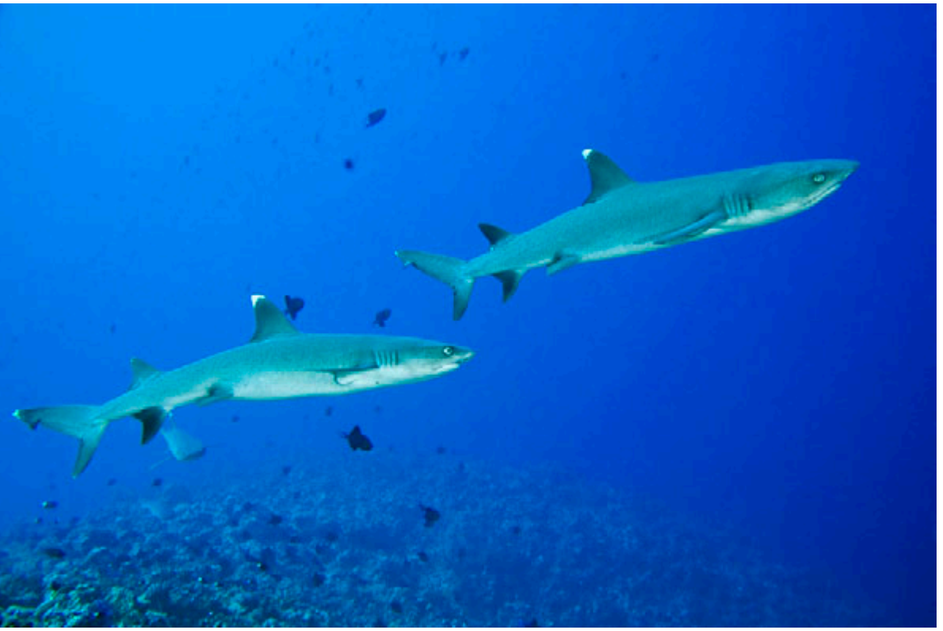

official shark wrestler; he is the only one able to hold a grey reef shark down. The shark is obviously not too pleased with our actions, and the only way it can defend itself is of course by biting. The razor-sharp teeth get much too close for comfort. Once Angelo has turned the shark on its back, it calms down.

Keeping the oxygen flowing

Another crew member inserts a tube with running seawater into the sharks mouth, to give it the essential oxygen through its gills. PhD student, Gabriel, makes the cut, and Meekan jots down all the data: size, sex, number of the tag. Nearly all caught sharks are female. While Peter does the job under the surface, I climb around the boat to document everything topside; I have been warned that I must use every opportunity. There will be no waiting until I have taken my shots. Everyone wants the shark back in the water at high speeds. It's all like watching a sharky episode of ER, from pulling the shark onto the stretcher until the moment the patient is released into the water again!

The Micronesian Shark Foundation can now use state-of-the-art new tags, with a battery life of over ten years. A big improvement, as the old tags gave up after three years.

The importance of the diving community

Project leader, Tova Harel of Fish 'n Fins in Palau, started this project a couple of years ago. Her boats go out every day—day after day—under all weather circumstances. Most scientists spend only a couple of weeks 'in the field', but the Palauan dive masters are there each and every day. Together with the guests, they fill out forms—how many sharks, depth, water temperature, male or female? The 'receivers' on the reefs supply data on the moving patterns of the grey reef sharks. All

TOP TO BOTTOM: Preparing the tag and inserting the tag into the shark; Writing down all data (left)

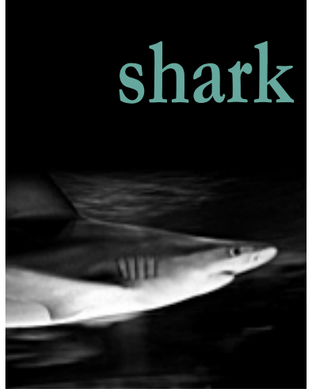

these data are of immense value for the research project.

The Micronesian Shark Foundation has made project presentations to the Honorable Johnson Toribiong—Palau's current president—the Counsel of Traditional Chiefs, board members from the Palau Visitor's Authority (PVA), Belau Tourism Association (BTA) board members and general membership, the Explorers Club and Oceanic Society Groups, also emphasizing the importance of sharks for a healthy ecosystem and reefs and their value for the flourishing Palauan tourist industry. All this came with success; Palau became the first official Shark Sanctuary in the world!

Later this year, the Micronesian Shark Foundation and Save Our Seas will start an educational programme on the other islands of Micronesia. ■

www.saveourseas.com
www.msfpalau.org

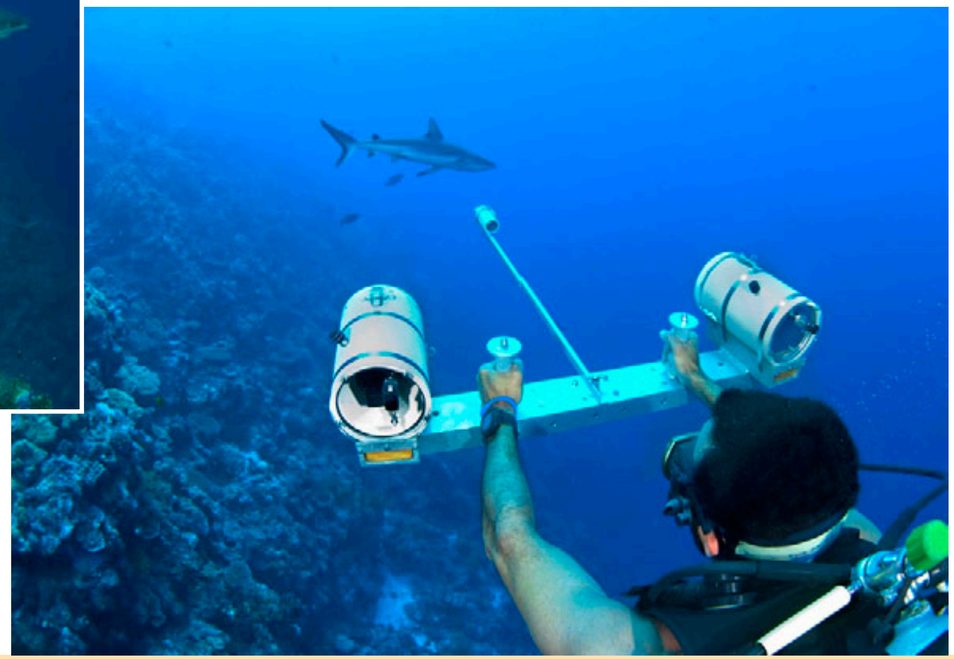

CLOCKWISE FROM TOP LEFT: Back onto the stretcher; Back into the water—some sharks are held by the tail until the researchers are convinced it is fully recovered; Accurate measuring of sharks free-swimming in the water by using new technology—a DOV (Diver-Operated Video) stereo camera system; Shark-watching in Palau

My, what big fins you have!

Text by Mark Meekan, scientist
Save Our Seas Foundation

Accurate estimates of body size are essential for determining the health of shark populations. In the past, this usually involved capturing and restraining animals in order to measure them, with the attendant risk of injury to both researchers and the sharks.

Fortunately, new technology has overcome this problem, and we are now able to measure, with great accuracy, the body proportions and size of free-swimming sharks. This is done using a stereo-camera system operated by a diver (diver-operated video or "DOV").

In Palau, a project funded by Save Our Seas Foundation and led by Dr Mark Meekan of the Australian Institute of Marine Science and Gabriel Vianna of the University of Western Australia has been using this approach to measure sharks at popular dive sites. Paired video cameras in housings film the sharks and a diode (light) in the front of the cameras allows the researchers to synchronize frames of the video.

Using principals originally developed for aerial photography, these researchers are then able to calculate the length of any body part and total size of the animal with a precision of a few millimeters. The technique is so accurate that the researchers can recognize individual animals by their body proportions. By repeatedly filming the same animals over a number of years, they will be able to measure growth rate of these sharks. ■

Natural Light

Text and photos
by Lawson Wood

Certainly, natural light photography is much more prevalent for point-and-shoot cameras, as the internal flash on the camera rarely penetrates the water column far enough and powerful enough to be able to illuminate a large subject, such as a big fish, scuba diver, reef wall or shipwreck. White balance alteration will help this. However, you may wish to take a large wide angle photograph without flash, just to be able to avoid any problems of backscatter, should you have used flash. More often than not, what started out as a flash photography dive ends up being a natural light photography dive because your flash batteries have died on you just a few frames into the dive!

What do you do? Do you abort the dive, get out of the water, change batteries and jump back in? Unfortunately, this is not always possible, so you have to grin and bear it and look for a suitable subject that

Subject: Ras Muhammed, Sinai Peninsula, Egypt. 10mm lens, ISO 100, Natural Light, 1/80th second at F8

Steamship *Kingston*, Shag Rock, Gulf of Suez, Red Sea. 10mm lens, ISO 100, Natural Light, 1/80th second at F5.6 plus Photoshop fix.

Subject: Steam ship *Kingston*, northern Red Sea. 10.5mm lens, ISO 200, Natural Light, 1/125th second at F.11

either suits the blue or green quality of the water. The subject matter may also lend itself to a quick fix in Photoshop, or you can go the whole way and take the photograph with a view to converting it to monochrome at a later date.

This is the Steamship *Kingston* (right) wrecked in the Red Sea in the late 1800s. As you can see the darker photograph lacks that 'oomph!' to bring it into the real world and is altogether rather dull. By doing two simple processes in Photoshop, the colour has been fixed and the saturation is much more pleasing to the eye.

This natural light photograph (left) also taken in the northern Red Sea displays a certain optical characteristic that is only found underwater. *Snell's Window* is created when the surface of the water is absolutely flat calm, so much so in fact, that when viewed at an angle, the scene underwater is reflected on the under-surface of the sea. In fact, the reflection is actually of the other side of this large coral head in the foreground.

Whilst most underwater photographers would undoubtedly wish to photograph these colourful Red Sea subjects using flash for illumination, there is something to be said for the natural feeling that you get when using natural light. Also remember that many

Subject: Gordon Reef, Straits of Tiran, Red Sea. 15mm lens, ISO 100, Natural Light, 1/60th second at F8

Subject: Green Turtle (*Chelonia mydas*), Marsa Alam, Red Sea. 10mm lens, ISO 100, Natural Light, 1/60th second at F8

Subject: Humpback Whale (*Megaptera novaeangliae*) Ruruta, French Polynesia 15mm lens, ISO 100, Natural Light, 1/60th second at F8

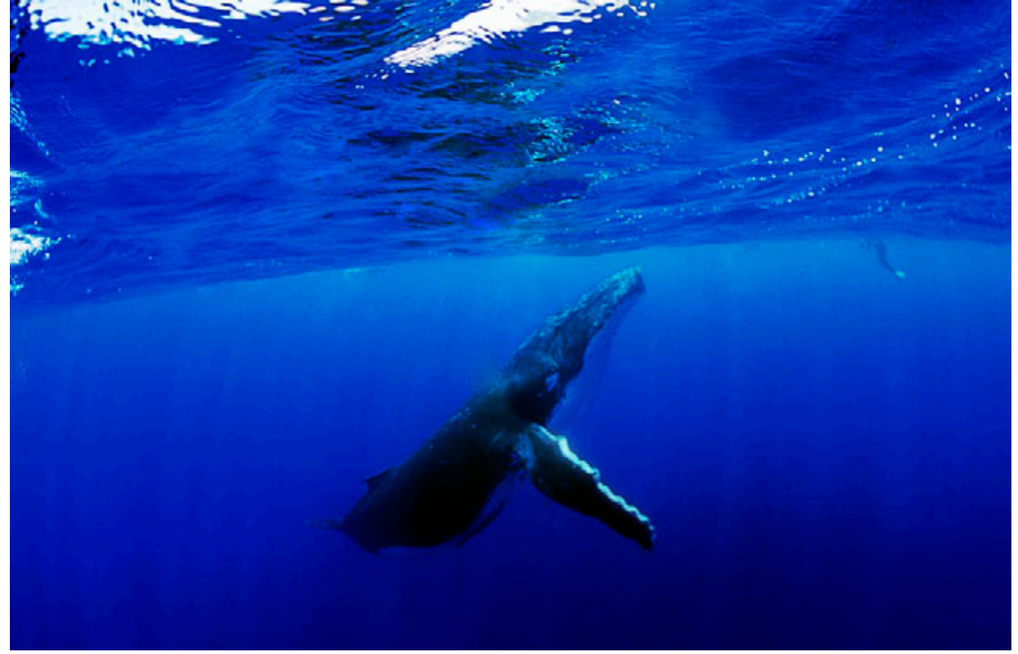

Subject: *Bristol Beufighter*, Malta. 10mm lens, ISO 100, Natural Light, 1/100th second at F5.6

viewers of our underwater realm only see it from snorkeling and that virtually every wide angle view that you see in large blockbuster television series are also in natural light, so this type of scene would appear perfectly natural to anyone looking at it.

More often than not, it is the sea conditions or the sheer physical scale of the creatures or subject matter that you are photographing that will determine whether you use flash or not. In the photograph below, the turtle was kicking up too much sand for the flash to be effective, in fact the use of flash spoiled the photograph. In the photograph above, this humpback whale was simply too massive and too far away for the flash to have any effect

BELOW: Green Turtle, Marsa Alam, Red Sea. 10mm lens, ISO 100, Natural Light, Natural light photography is also perfectly suited for some artistic licence. By not using flash, we are now able to interpret our photographs in another style, such as monochrome. By removing the colour channels and changing them into black and white, we now have the option to add a colour wash over the black and white image thus making it warmer in feel and perhaps not as harsh as monochrome.

Subject: Royal Navy Ensign on propeller shaft of *HMS Royal Oak*, Scapa Flow, Orkney Islands, Scotland 15mm lens, ISO 400, Natural Light, 1/60th second at F5.6

Subject: Lionfish (*Pterois volitans*) Sh'ab Ali, Northern Red Sea. 10mm lens, ISO 100, Natural Light, 1/100th second at F:16

whatsoever. Natural light is the only option.

Shipwrecks always lend themselves to natural light photography. It is worth mentioning here that there are many different types of underwater wreckage including aeroplanes, historic artifacts and in this case (above), the Royal Navy Ensign Flag, which is placed each year at the stern of *HMS Royal Oak* as a mark of respect for the 833 men who lost their lives in October 1939.

Whilst we all strive to use flash to get the colour we want, more often than not, the smaller compact cameras' own internal flash is just not strong enough to cope with any large vistas, creatures or shipwrecks. Therefore more underwater photography is undertaken in natural light than in any other format giving most photographs viewed as being in shades of blue. We can make adjustments with

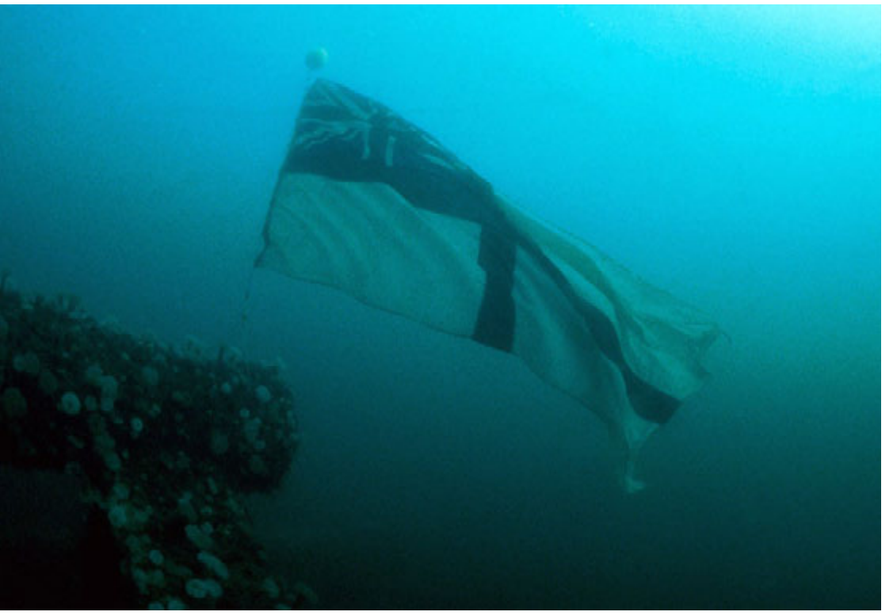

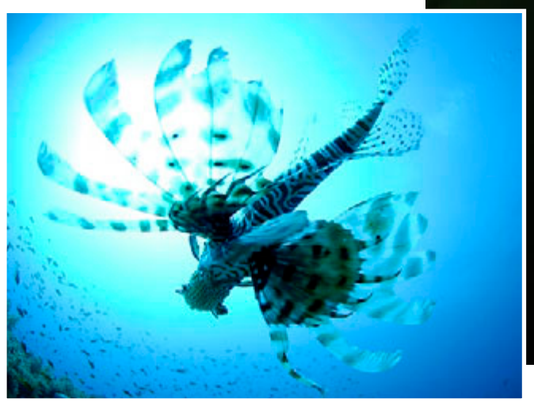

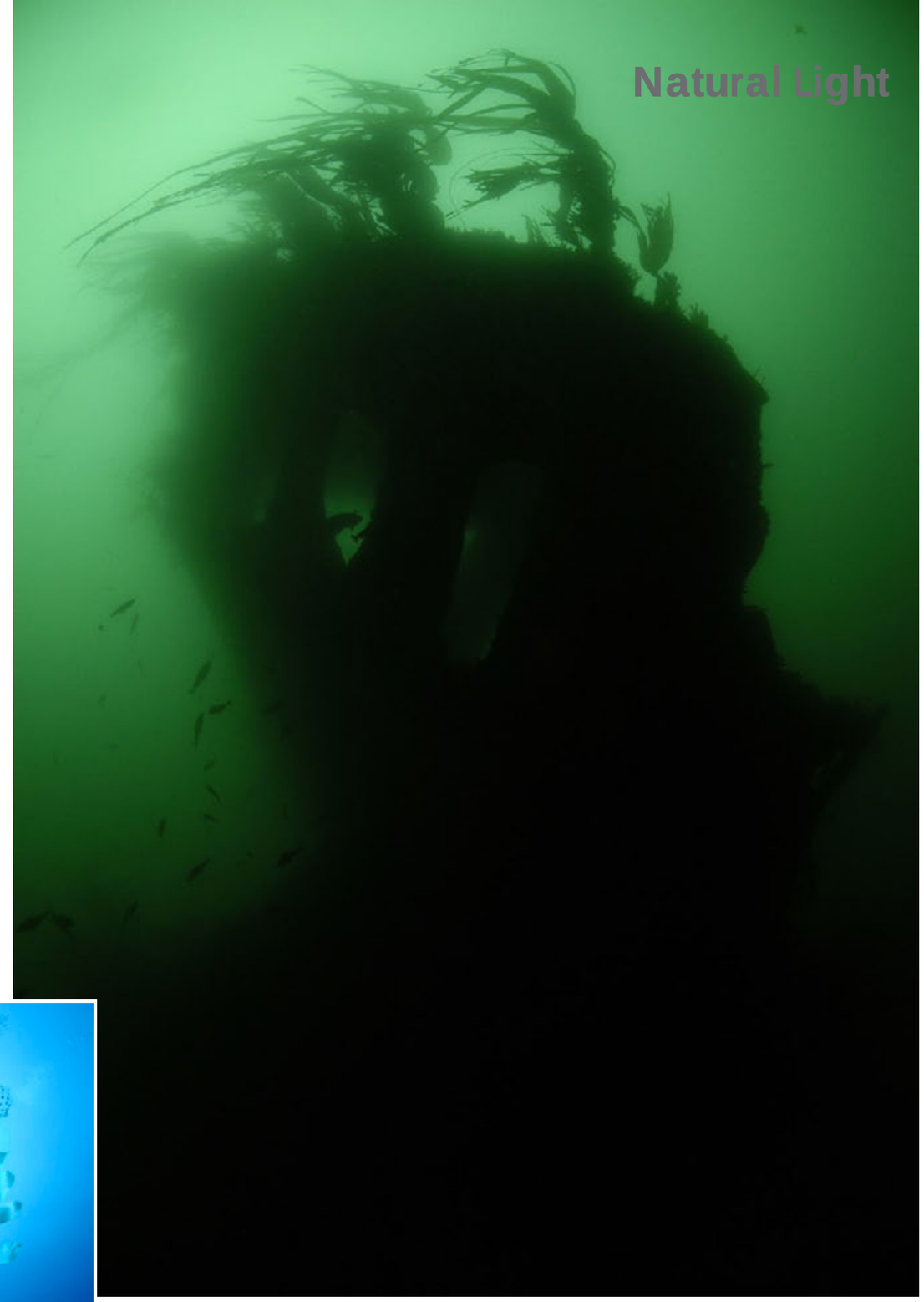

Subject: Blockship *Doyle*, Burra Sound, Scapa Flow, Orkney Islands, Scotland. 10mm lens, ISO 200, Natural Light, 1/80th second at F4

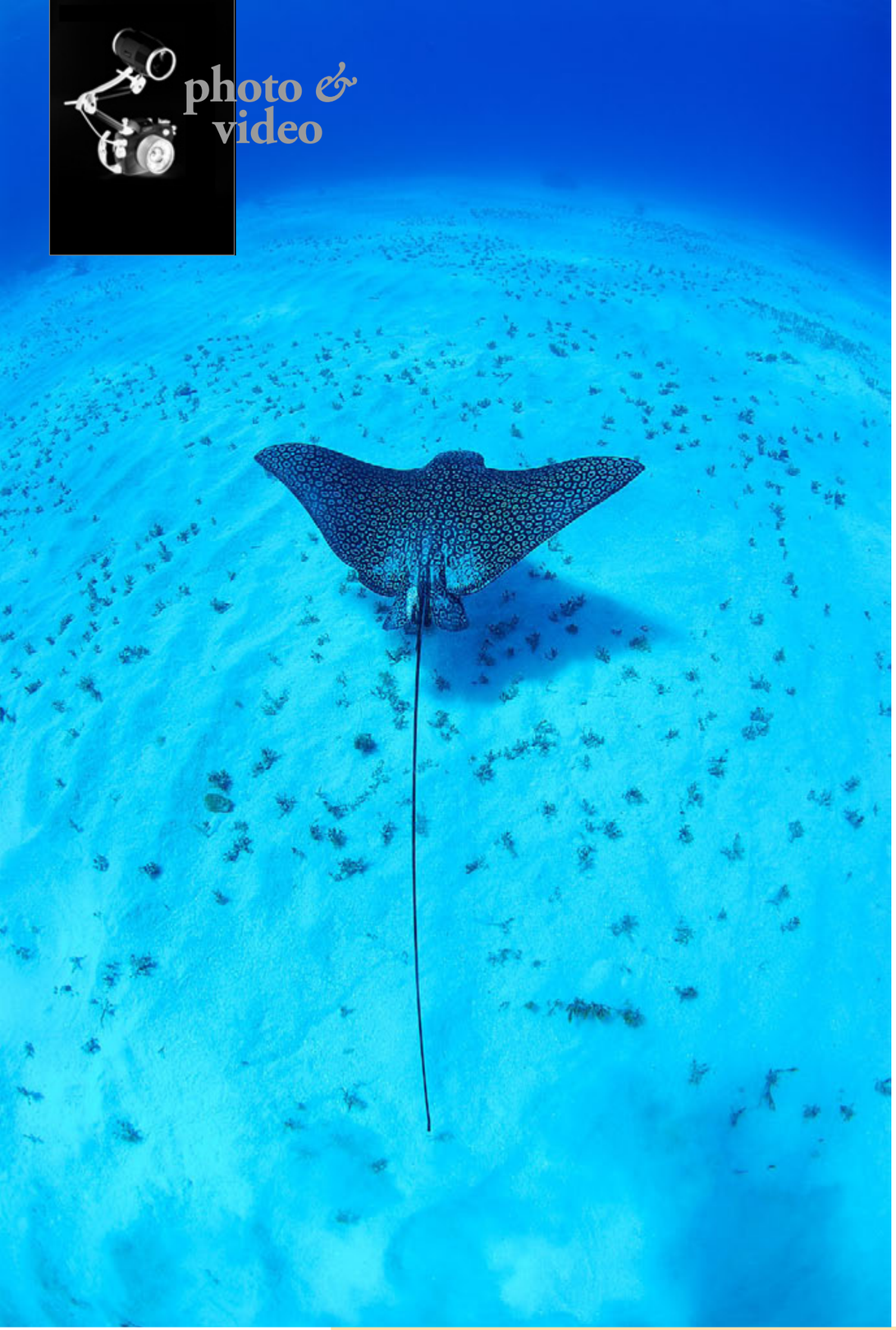

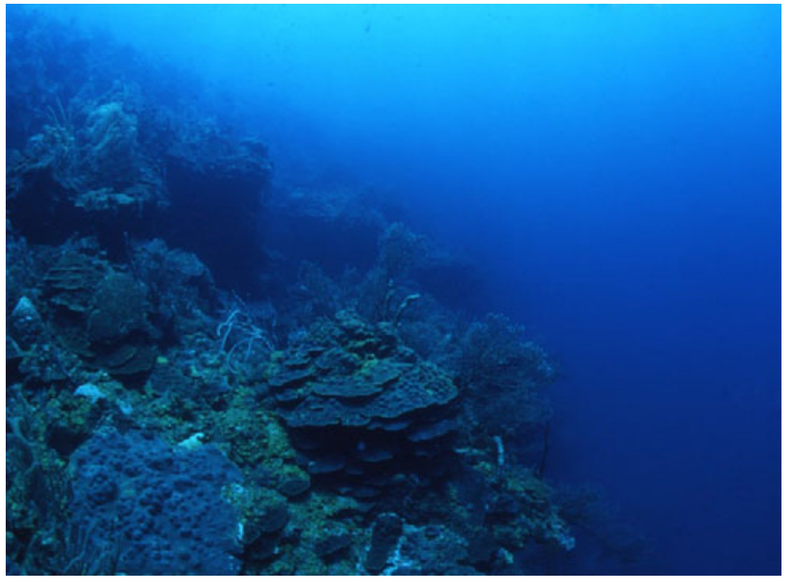

Subject: Caribbean Reef, Hog Islands, Honduras
15mm lens, ISO 100, Natural Light, 1/60th second at F5.6

the white balance setting on the camera, use colour correcting filters or utilize quick fixes on photoshop or some other brand of image adjustment software. However, we still tend to use natural light in all of its variations of blue and green colours to depict the scene we are trying to achieve and share that photograph with friends on the internet. ■

Subject: Whaleshark (*Rhynchodon typus*) St.Anne Marine Park, Seychelles. 15mm lens, ISO 50, Natural Light, 1/60th second at F5.6

Subject: Eagle Ray (*Aetobatus narinari*) Little Cayman Island, Cayman Islands. 10mm lens, ISO 100, Natural Light, 1/100th second at F5.6

News edited by Don Silcock

Inon Insect Eye

Inon announces "insect eye" conversion lens for compact cameras— the UFL-M150 ZM80 underwater Micro Fisheye Lens. The new lens provides 150 degrees ultra-wide angle fish-eye imaging. with a minimum focusing distance of 0cm and attaches via a "Mount Base" adaptor. To use the new lens the camera's zoom position must be set to approximately 80mm (35mm film equivalent). Inon has also released a series of adaptors, including M27 to AD bayonet, M27 to M67 and M27 to LD mount. It is compatible with a wide variety of Olympus, Fujifilm, Sony, Canon and Panasonic cameras/housings. A full list of suitable housings is available as a pdf download on the link to the Inon site below. The new lens is available now. **inonnews.blogspot.com**

Gates REDMOTE controller housing

Gates Underwater Products has announced the release of a housing for the REDMOTE controller for use with the Deep Atom 3D and Deep Epic camera systems. The REDMOTE housing allows full access to all camera and remote control functions, and employs magnets to align the unit within the housing. Lastly, it has handles to allow the user to maintain control of the camera whilst using the remote at the same time. **www.gateshousings.com**

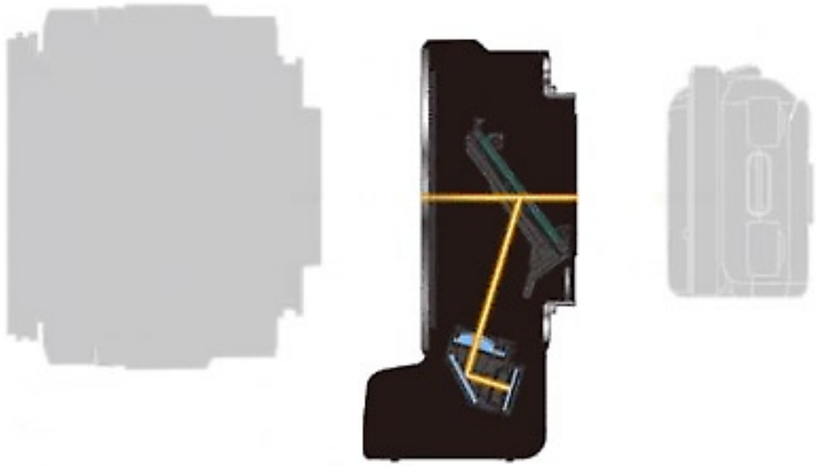

Sony NEX adapter for A-mount lenses

According to the Photo Rumors site, Sony will introduce a new lens adapter that will allow the use of A-mount lenses on Sony NEX. Called the LA-EA2, the adaptor will have a translucent mirror to support AF and it is expected that the adaptor will be officially launched on 24 August, together with two new EVIL cameras and two new SLRs. See: **photorumors.com**

Sealux housings for Sony 3D cameras

Sealux has announced the release of two new housings for the Sony HDR-TD10 consumer and the HXR-NX3D1 professional camcorders. Both housings are manufactured of aluminum and allow the use of the cameras' LCD screens as monitors. The housing lenses are made of optical glass and "provides the full picture quality of the Sony 3D lenses". An attached lens hood avoids reflections on the lens, protecting against sunlight reflecting off of it. **www.sealux.de**

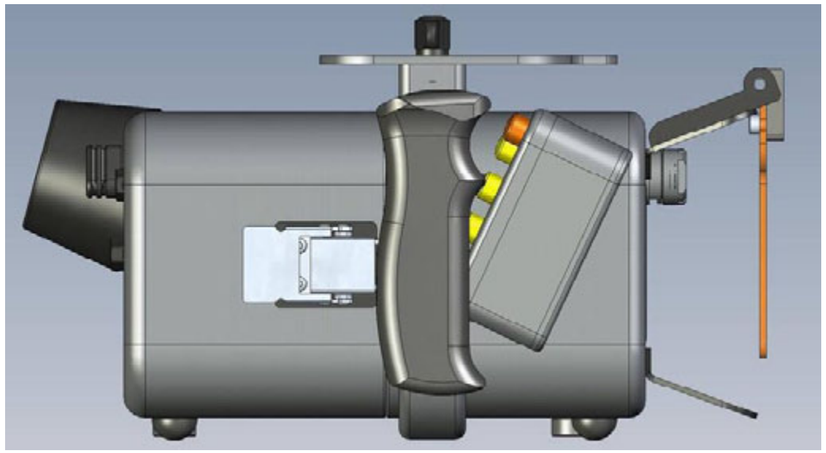

Nauticam Panasonic GF2 housing

The NA-GF2 has access to all of the important controls on the camera including shutter release, zoom, movie record, and the control dial. The Fn (function) button is placed to be used by the right thumb. he GF2 command dial requires turning and clicking so Nauticam has separated the dial function into two separate controls on the housing. The NA-GF2 housing also features a removable fibre optic bulkhead to allow for optical sync and TTL with external strobes, or the use of the internal flash. Ports are available for Lumix 4/3 lenses, including 14-24mm, 14mm, 8mm fisheye, Leica 45mm macro, Olympus 14-42mm and 9-18mm. **www.nauticam.com**

News edited by Don Silcock

Nikon Releases CoolPix P7100 and AW100

Nikon P7100

Nikon has announced a series of new Coolpix cameras, including the Nikon COOLPIX P7100 and the AW100/AW100s, The P7100 will retail for $500 and is the top of the line Coolpix range, will be available in September, has upgraded the shutter lag and response time from the P7000 it replaces. The camera is said to be able to acquire focus in 0.16 seconds and has a shooting time lag of 0.22 seconds which makes it a fast point and shoot. The camera has improved noise reduction and sports a lens that is equal to a 28-200mm lens, with f/stops ranging from f/2.8 to 5.6.

The AW series, is Nikon's first entry into shockproof/waterproof cameras, is waterproof to 33feet/10 meters and features a 16 Megapizel camera, GPS and is shockproof up to a 1.5 Meter fall. The AW100/AW100s has a lens range of 28-140 and shoots video at 1920 x 1080, but does not capture RAW images. It is available in a range of colors, including orange which is reminiscent of the older Nikonos cameras. **www.nikon.com**

Nikon AW100

Sony's New NEX-7 EVIL Camera

Sony has introduces the NEX-7 all-in-one compact interchangeable lens camera with 24.3 megapixel resolution. While still lacking the full complement of lenses required by discerning underwater photographers the new NEX-7 is definitely a step in the right direction. The camera's small size but excellent functionality makes it a strong contender for underwater photography once the outstanding lenses are available and the housing manufacturers release their products for the NEX-7

SeaLife SL980 Underwater Photo/Video Light

SeaLife has introduced the revolutionary SL980 Underwater Photo/Video Light. It is a powerful 500-lumen LED light source composed of a three-position array of 6,500K-color-balanced 3-watt Cree XP-G R5 LEDs. The light is good for close-up underwater photography and videography enabling shooters to capture more detail and depth in close-up shots, which strobe-only pictures often lack due to flash intensity. Even illumination comes from a 70-degree wide-angle beam. It also doubles as a continuous dive light. Depth tested to 300ft. Fits all SeaLife cameras.
www.sealife-cameras.com

Sony Releases A77 SLT Camera

Sony announced the release of the A77 SLT (single lens translucent) camera, which is looking a serious competitor to the established brand leaders. Specifications include 12 fps burst shooting, 19 point AF, 24.3 megapixel Exmor sensor, HD movie capability at 50p/25p and an ISO sensitivity range from 50 to 16000. In video mode, the camera allows for manual focusing and P/A/S/M exposure modes. When the specifications of this camera were leaked to the photographic press, it was noted that this is a camera that housing manufacturers should be including in their plans.

Nudibranch Safari

Text and photos by Christian Skauge

—Cold water nudibranch world record at Gulen Dive Resort?

The 2012 Nudibranch Safari at Gulen Dive Resort was a phenomenal success. A staggering 49 species of nudibranchs and seven other ophistobranchs were identified during the weekend—on one divespot.

Expectations ran high as 16 participants from Norway, Sweden, Denmark and the Faroe Islands gathered at Gulen Dive Resort north of Bergen in Norway to look for nudibranchs the last weekend in March.

Beforehand, the organizers doubted whether it would be possible to find more species than last year, when participants identified what was at the time thought to be an almost unbeatable number of species: 36 nudibranchs and 4 other ophistobranchs. Their doubts were quickly put to shame as the Nudibranch Safari progressed – but even the most optimistic were surprised at the final outcome.

A scientific sensation

After diving the magnificent house reef at Gulen Dive Resort for four days, a staggering 49 species of nudibranchs and 7 other ophistobranchs had been documented and collected – including two species never before observed in Norwegian waters.

Never before have so many species been documented in just one spot in Norway. The finding of two species never before seen in Norwegian waters and one that has not been documented for 140 years is no less than a scientific sensation.

Underwater photographers Thorbjørn Rusnes and Erling Svensen each found a new species – a Goniodoris castanea and an Onchidoris oblonga.

Apart from these spectacular observations, the rare Tritonia lineata was documented for the first time since 1878 in

Norway, and the rarely observed species Onchidoris depressa and Colpodaspis pusilla also made appearances. Several of the participating divers found other rare species.

Nudibranch Project

As was the case on last year's Nudibranch Safari, scientists Jussi Evertsen and Torkild Bakken from the Norwegian University of Science and Technology (NTNU) were responsible for the workshop. They were again duly impressed by the many species found on the Gulen Dive Resort house reef, and brought back a number of species for DNA barcoding and classification.

The two scientists have since 1997 been running a project called "Nudibranchs of the Norwegian Coast" and are among the most experienced in the world in their field.

On their project website www.nudibranchia.no they have published a list of all the species so far documented after the Nudibranch Safari. The work is still in progress, and even more new species might turn up – several strange species were found that will have to be investigated further.

The participants had access to stereoscopes and nudibranch literature all weekend to help identify and study the collected specimens in close-up detail. A steady stream of subjects was put under the scopes, and it was not long between excited outcries from the scientists – a rare species had turned up.

High level

The Nudibranch Safari is basically for everyone, regardless of experience or education. This years gathering nevertheless held a very

high standard – no less than four marine biologists and several of the best Norwegian underwater photographers turned up. Among the latter was Erling Svensen, known for photographing the excellent book Marine Fish & Invertebrates of Northern Europe, a must-have for all divers interested in marine biology.

The media were also interested in the Nudibranch Safari, and several local newspapers wrote about it both before and after. The Norwegian state broadcaster NRK also published a story; so did even the Rumanian website www.mydive.ro!

A perfect habitat

The house reef at Gulen Dive Resort has proven itself to be a perfect habitat for nudibranchs, and the number of species observed so far is almost impossibly high: Norwegian waters harbour close to a hundred different nudibranchs, of which around 30 are deep-water species. The fact that the participants on the Nudibranch Safari managed to find more than half of all known species and about ¾ of the ones found on diveable depths is nothing short of incredible – especially when considering that this was all done on one single dive-spot!

A new Nudibranch Safari has already been planned for 2012, and because of the great interest it will be extended to four days. Mark the dates 20.-25. of March in your calendar if you're interested! It will be very exciting to see if there are still more species out there waiting to be discovered.

READ MORE
www.gulendykkesenter.no
www.undervannsfoto.no
www.vm.ntnu.no